Embedded Control Systems - "Inbyggda styrsystem":
Introductory lecture

Martin Törngren, Mechatronics/KTH, www.md.kth.se/RTC

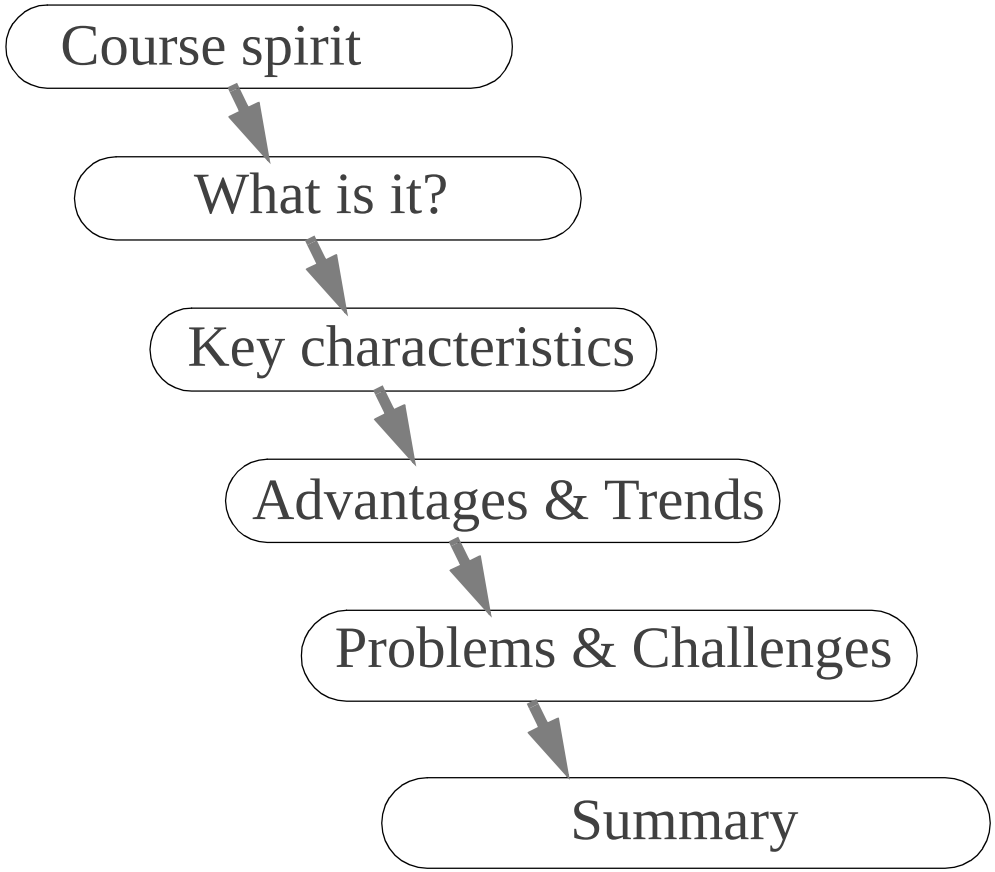

Filo Car



Foto Franco Turcati © 2001

Source: SKF & Bertone

2001-05-09

by-wire by SKF



2001-05-09

How do we make the embedded control system as reliable and safe as a mechanical steering device?

- Faults
  - Hardware: sensors, actuators, cabling, connectors, ...
  - Microprocessors
  - Software
  - Requirements, design, implementation and maintainance

- Lack of mature methods

Other difficulties arise because of the many stakeholders: Users, industries, public authorities, insurance companies, ...

Copyright by Martin Törngren/2001-11-15

Course overview: Scope!

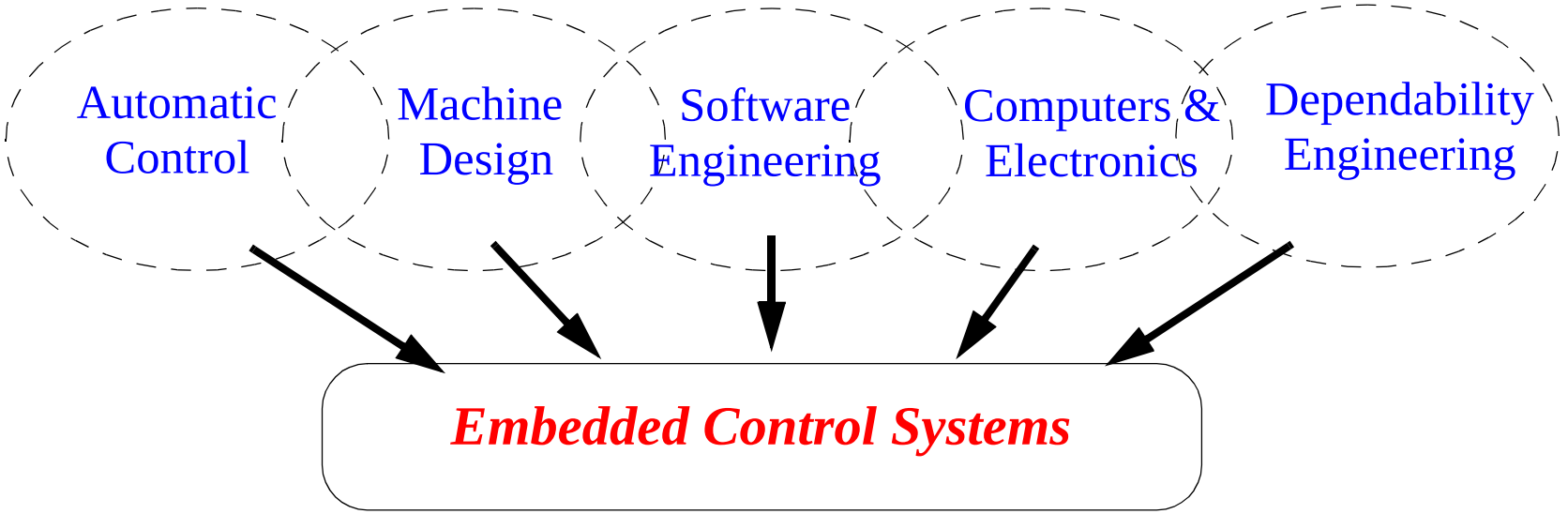

- *A multidisciplinary topic!*
- *Builds upon, integrates and applies what you learnt in earlier courses*

Copyright by Martin Törngren/2001-11-15

Embedded Control Systems (ECS) - What is it?

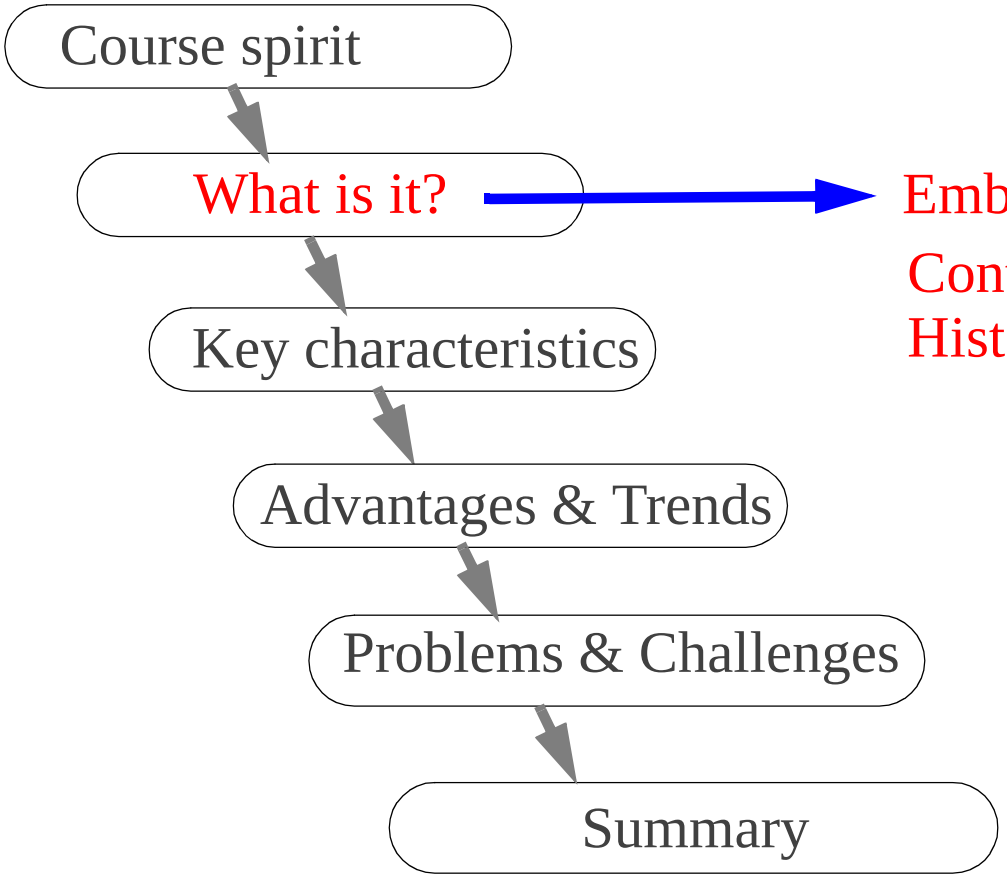

Embedded + Control = ECS?

Control basis!

Historical evolution

Copyright by Martin Törngren/2001-11-15

ECS - What it is: Control system block diagram

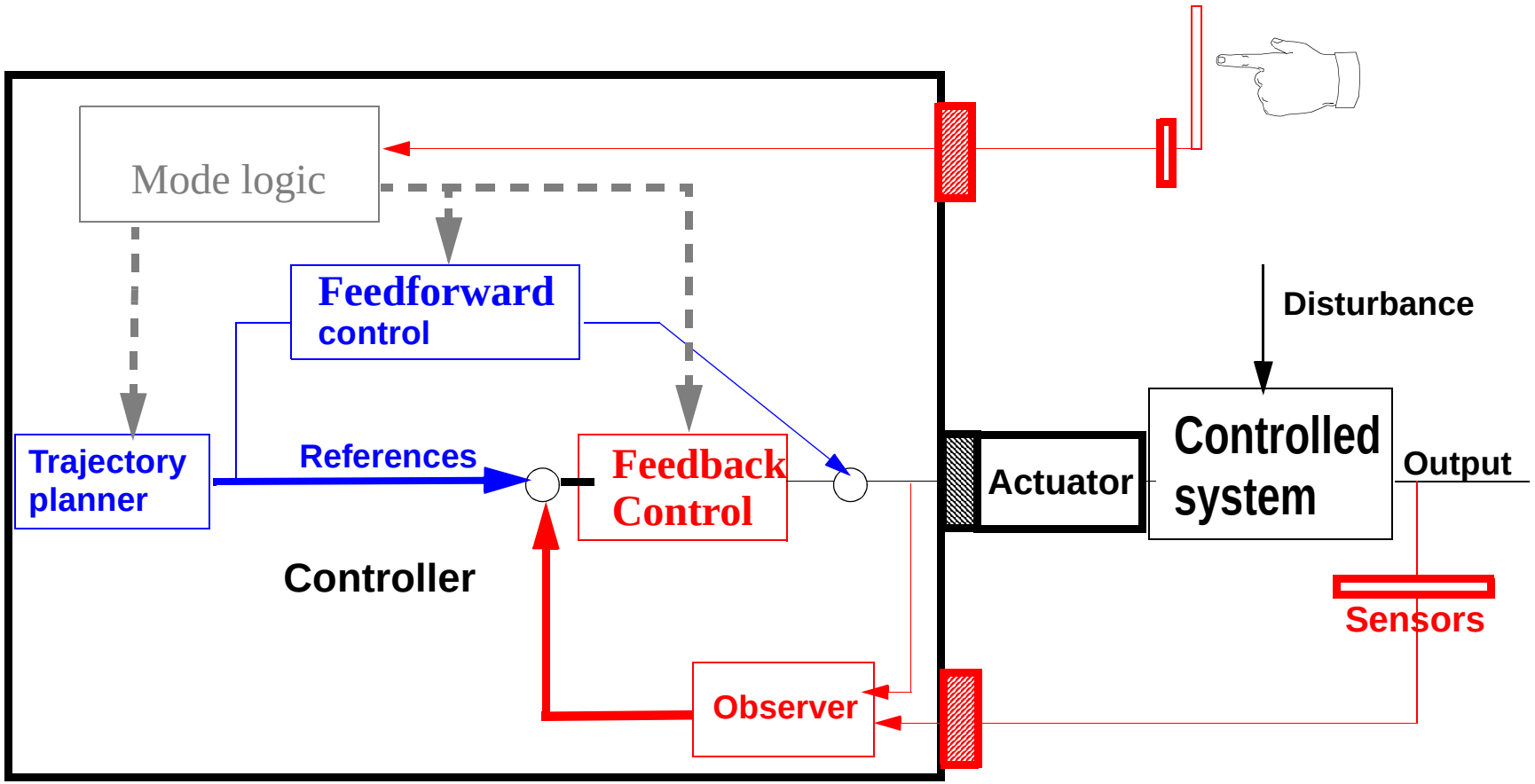

Copyright by Martin Törngren/2001-11-15

ECS - What it is: Control systems, continued

- **(IEEE):** *"A system in which a desired effect is achieved by operating on various inputs to the system until the output, which is a measure of the desired effect, falls within an acceptable range of values."*

- (Svenska): *"styrning, reglering, övervakning, ..."* ⇨ *styrsystem*

Summary so far:

- ⇨ Controller + controlled system
- ⇨ Event triggered, Continuous time, Hierarchy
- ⇨ Feedforward ("framkoppling") and Feedback ("återkoppling")
- ⇨ Well established mathematical theory

Very general and broad applicability!

Copyright by Martin Törngren/2001-11-15

ECS - What it is: Control technologies over time

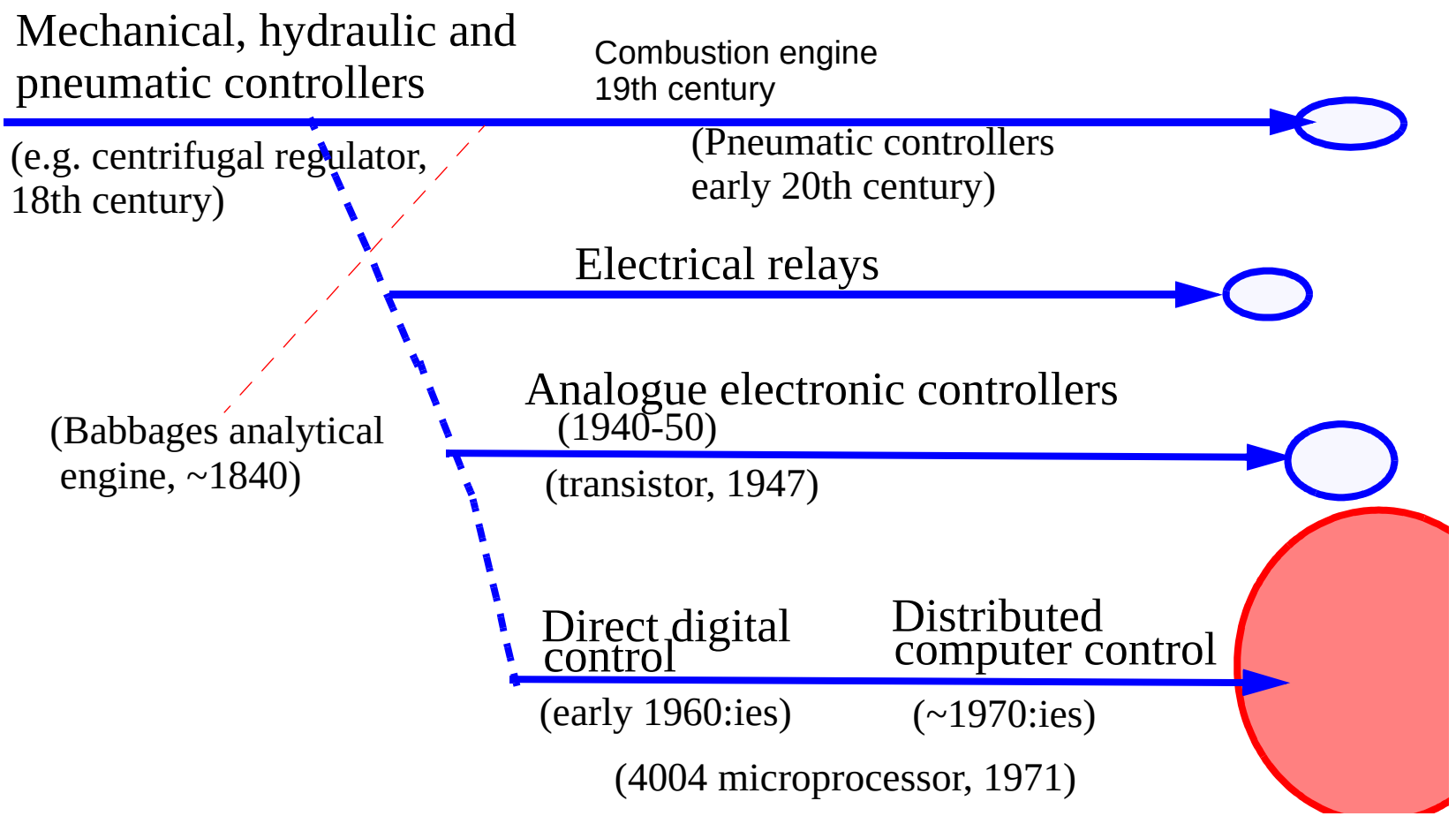

Copyright by Martin Törngren/2001-11-15

ECS - What it is: Control System Implementation

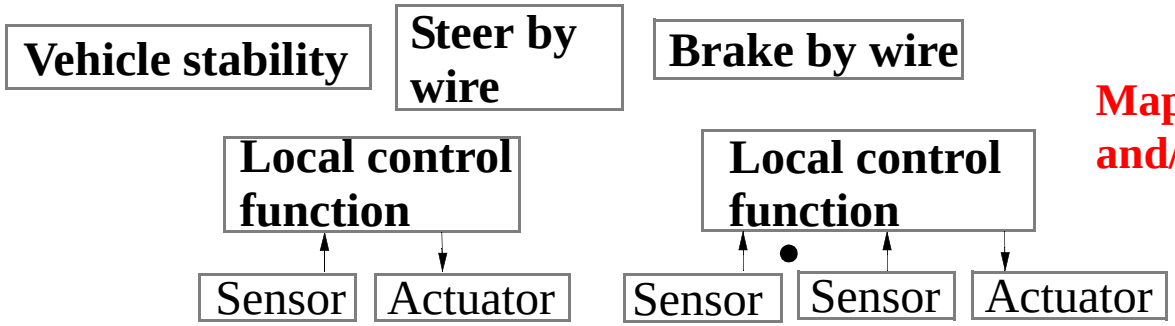

Map a function to "hardware" and/or "software" components

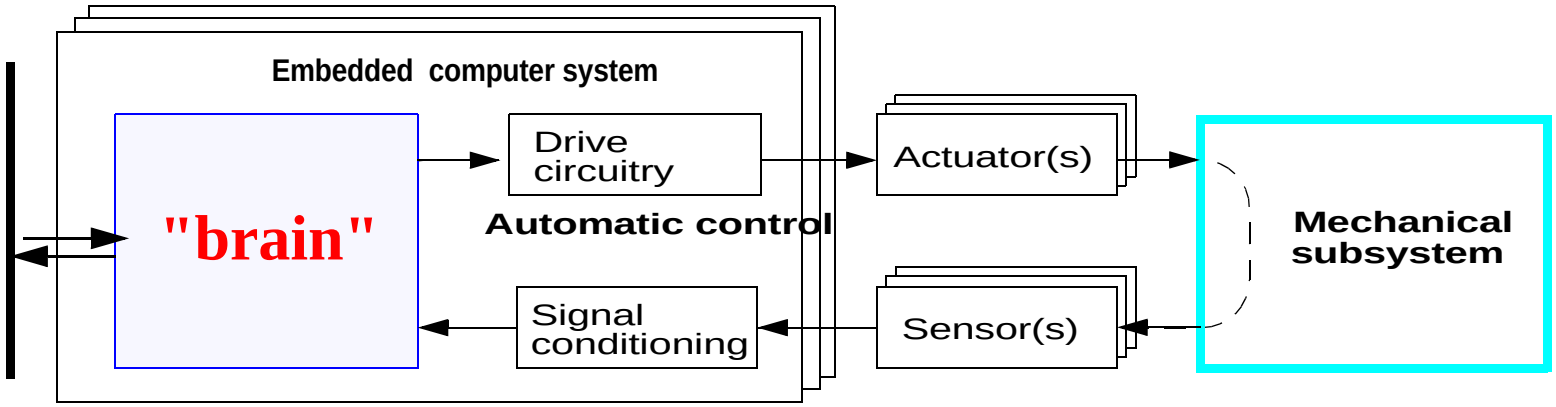

Copyright by Martin Törngren/2001-11-15

ECS - What it is: Control system *mapping*

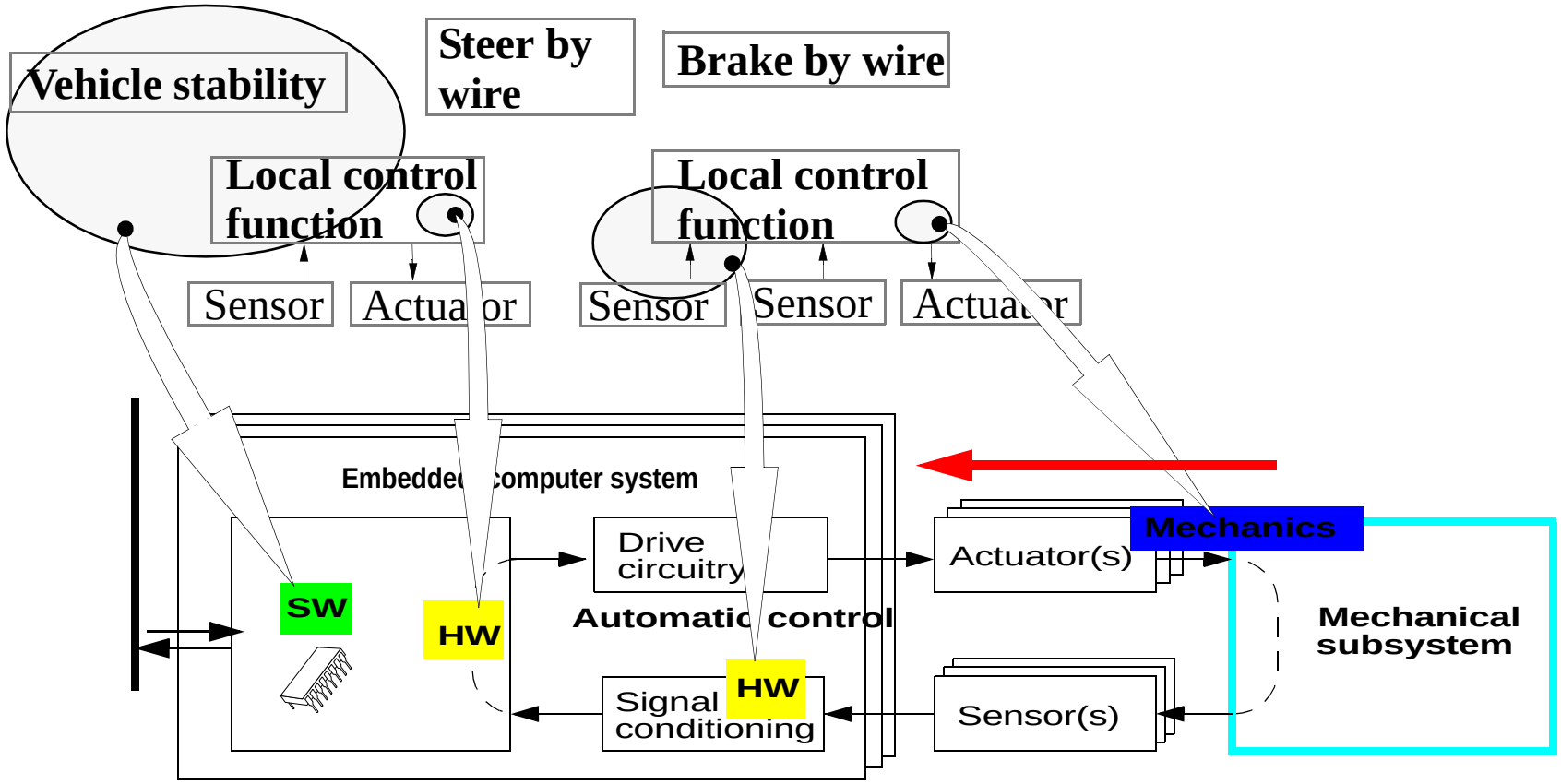

Copyright by Martin Törngren/2001-11-15

ECS - What it is: Node software

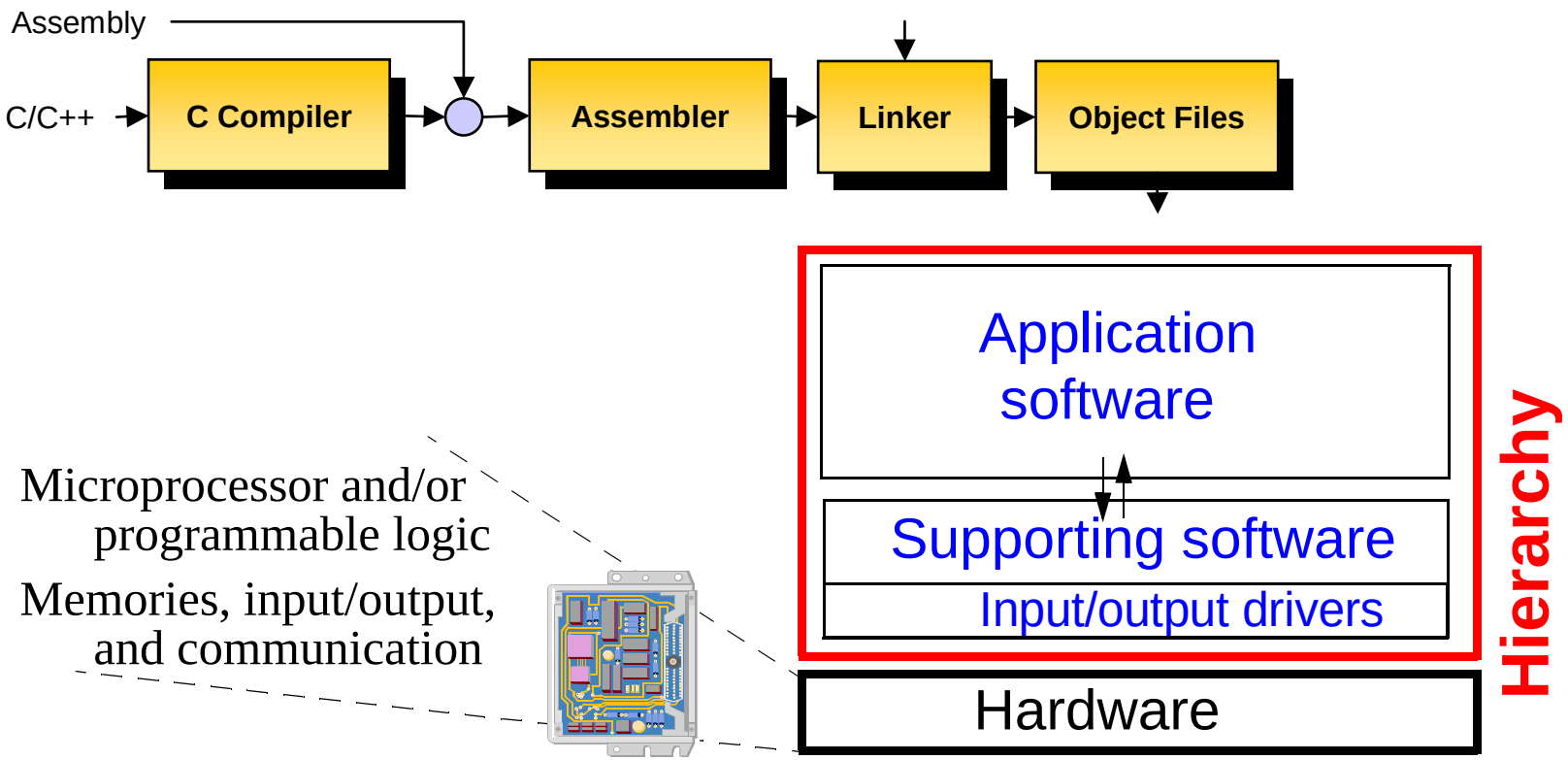

Copyright by Martin Törngren/2001-11-15

A microcontroller ("mikrostyrkrets") example

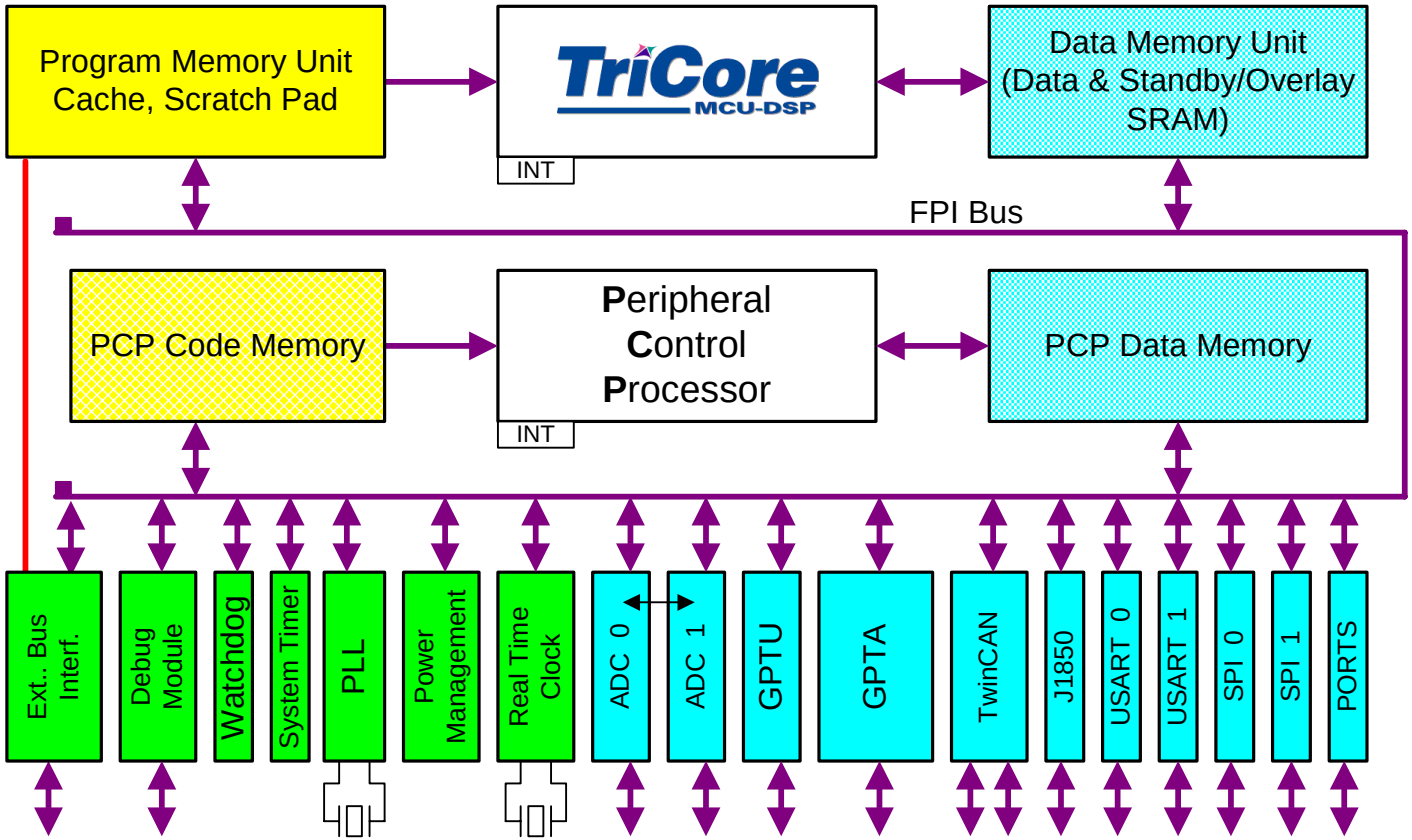

Source: Per Engdahl, Infineon

Copyright by Martin Törngren/2001-11-15

ECS - What it is: Embedded systems

- **(IEEE definition of embedded computer system):**
  A computer system that is part of a larger system and performs some of the requirements of that system; for example, a computer system used in an aircraft or rapid transit system.

- (Svenska): *Inbyggt system*

Characteristics

- ⇨ Embedding the control system into a product
- ⇨ Referring to implementation technology
- ⇨ Wide applicability

Copyright by Martin Törngren/2001-11-15

ECS - What it is: Wide variety of products!


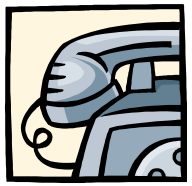
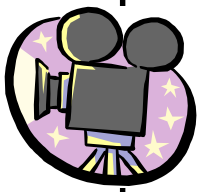

- *A very broad range of applications!*
- *From simple to complex automated control*
- *Very different requirements and characteristics regarding:*
  - Environmental aspects, interfacing and performance
  - Real-time, and life time
  - Safety, reliability, availability and security
  - Size/complexity, flexibility
  - Cost-sensitivity, users, legislation and certification

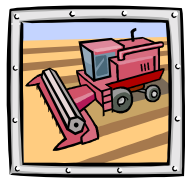
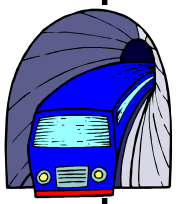


A space shuttle can hardly be compared with a sewing machine!

Copyright by Martin Törngren/2001-11-15

ECS - What it is: To Embed or Not To Embed, that is a relevant question!

- *Portable and moving devices*
- *Intelligent devices and proximity of control*
  id, diagnostics, local control
- *Modularity - building blocks*



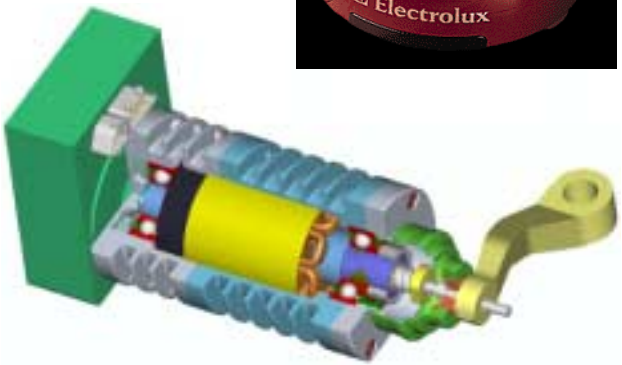

SKF mechatronic actuator unit

Considerations!

Embedding: size, weight, temperature, ...
Power supply and information interfaces
Architecture, decentralization, platform
Life cycle: Reliability, safety, cost, maintainance, recycling, ...

Copyright by Martin Törngren/2001-11-15

ECS - Key Characteristics

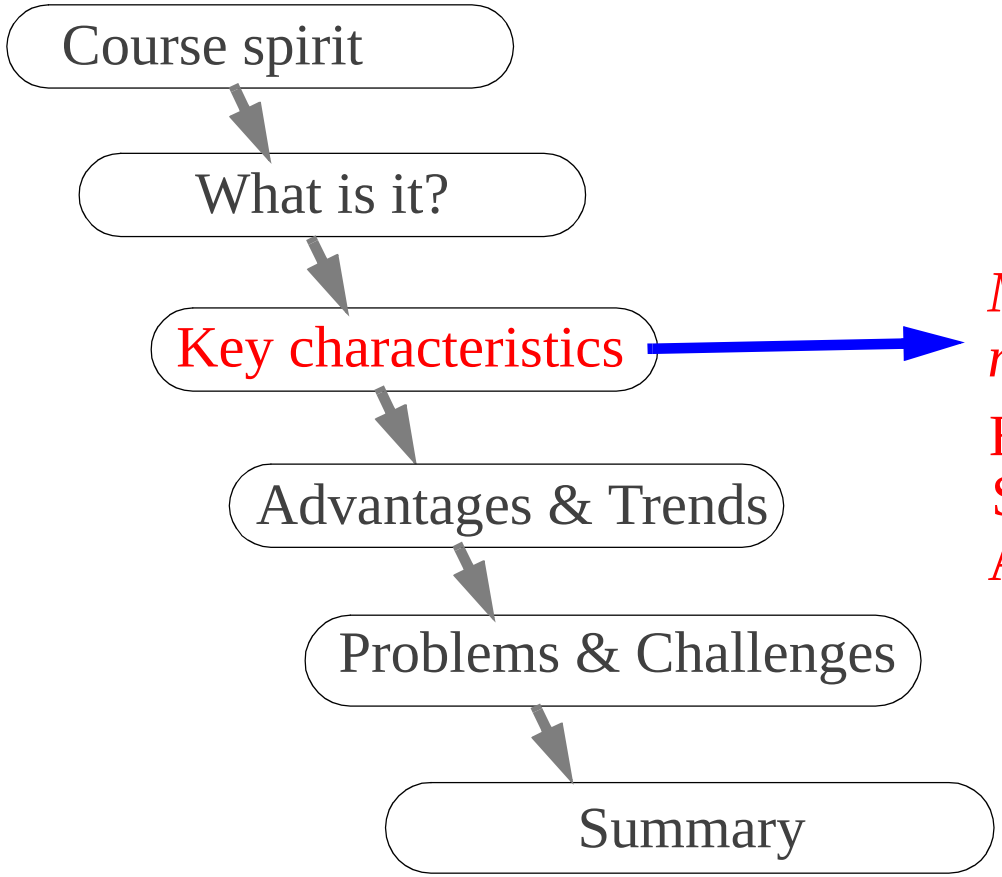

Machinery and motion control context

Harsh environment
Safety & real-time
Architecture & development

Copyright by Martin Törngren/2001-11-15

ECS - Key Characteristics: **Embedding!**

- *Harsh environment!*
  EMC, vibrations, temperature, contacts, cabling, ...
- *Long life time!*

Design issues:
- Robustness
- Reliability/availability
- Maintainance
- Diagnostics
- Real-time
- Safety



Scania: Engine *and* S6 engine control unit

Copyright by Martin Törngren/2001-11-15

ECS - Key Characteristics: Distributed Systems!

- *Several connected networks*
- *Coordination of nodes, e.g. autopilot*

Design issues:
- Structuring
- Control
- Platform (execution and communication)
- Error detection and handling

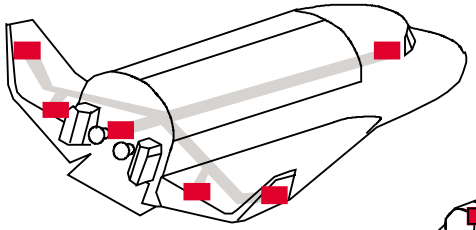

Embedded networks!
Serial communication

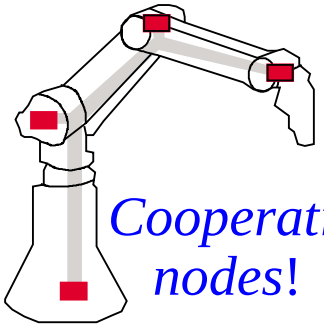

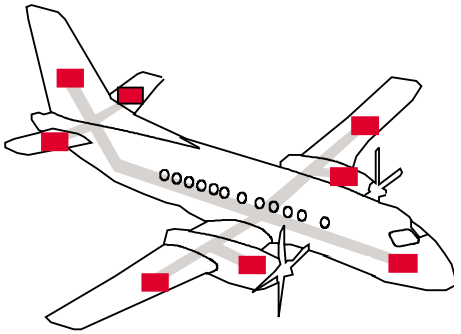

Cooperating nodes!

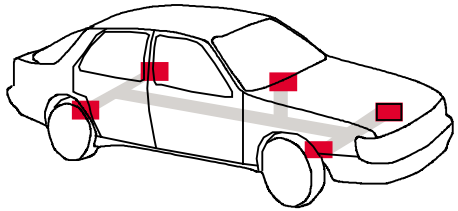

Up to 80 nodes in a modern car

Copyright by Martin Törngren/2001-11-15

ECS Advantages and Trends

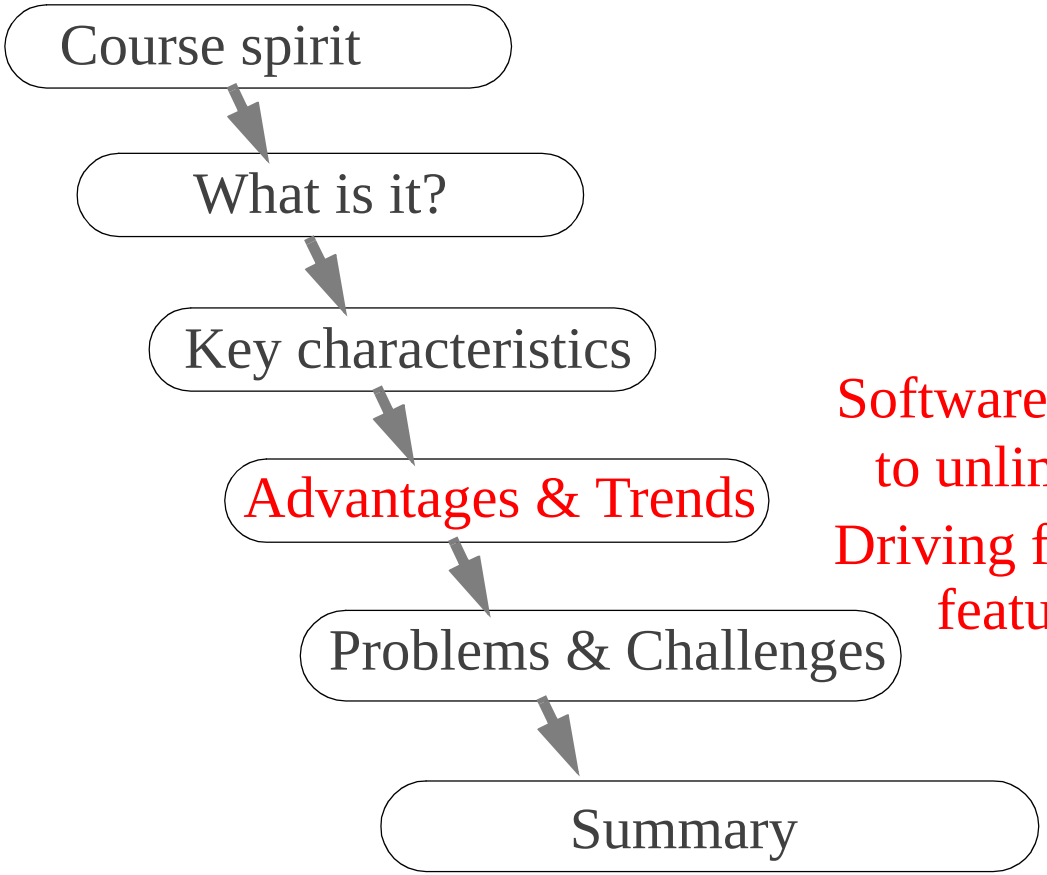

Software enabled control has close to unlimited potential!

Driving forces: competition, cost, features, legislation, safety, ...

Copyright by Martin Törngren/2001-11-15

ECS - Advantages... : More examples

Advantages:	**Examples:**
+ Reduced costs	Distributed systems++
+ New functionality	Turning (4wheel steer)
+ Flexibility of change	Product variants
+ Adaptiveness	Braking on slippery road
+ Improved safety	Collision avoidance
+ Improved human machine interfaces	Brake by wire
+ Maintainance	Embedded diagnostics
+ Environmental friendly	No hydraulic fluids
...	

Copyright by Martin Törngren/2001-11-15

ECS - Trends

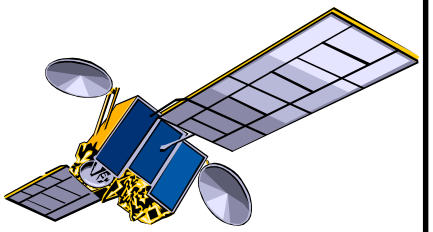

- *External connectivity of ECS (wireless communications)*
- *Continued technological improvements;*
  Example: micro-electro mechanical systems



- *Autonomous ECS, e.g. humanoids*
- *"Bio-ECS"*
  e.g. prostheses with neural interfaces



- *Ubiquitous computing (~"överallt förekommande")*
  e.g. "domotics"

Copyright by Martin Törngren/2001-11-15

ECS Problems and Challenges

Course spirit

What is it?

Key characteristics

Advantages & Trends

Problems & Challenges

Summary

Complexity facets

Lack of theory, methods, and people

Industry:



User interfaces

Copyright by Martin Törngren/2001-11-15

ECS - Problems: Complexity and immaturity

"Problems and inhibitors"	**Examples:**
- Multidisciplinarity	Understanding
- New faults and failure modes	"5 bugs/1000 lines of code"
- Security	Intrusion: wireless interfaces
- Tough requirements	10^{-9} *failures/h* for drive by wire
- Lack of mature methods	Major effort spent on testing, debugging and maintainance
- Gap from theory to practice	Real-time systems testing
- Theory limitations	Pessimism in timing analysis

Copyright by Martin Törngren/2001-11-15

ECS - Challenges: What is lacking?

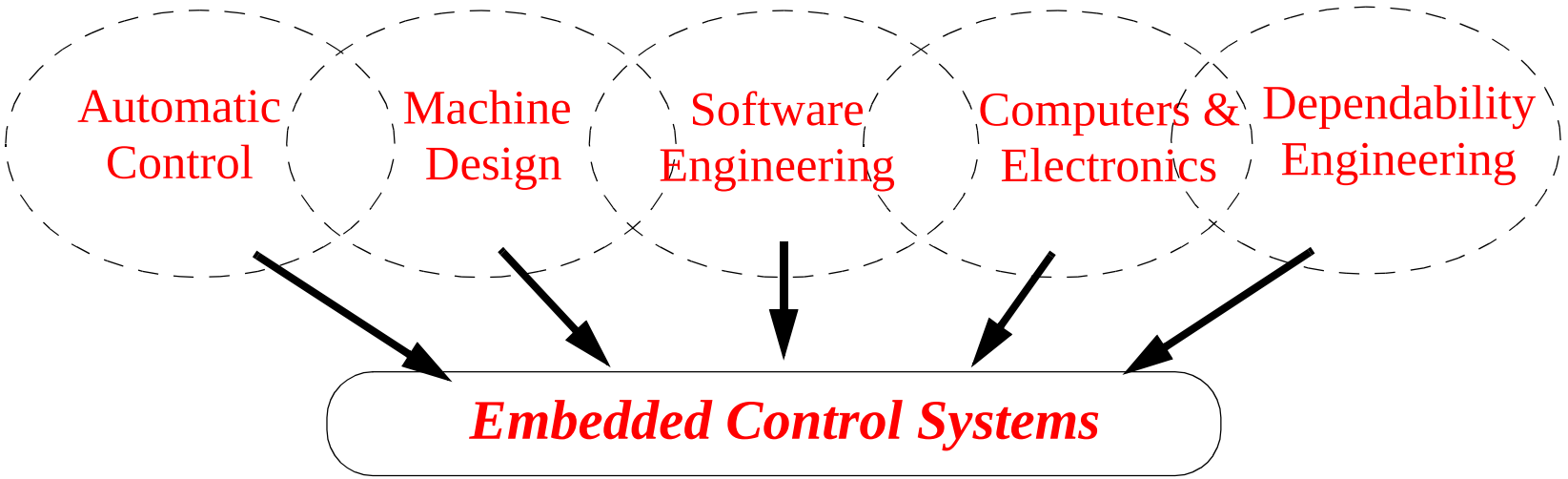

Optimization regarding system properties

* Architectural design: Interdisciplinary models, analysis & synthesis
* Principles, design parameters, methodologies
* Model based design and formal methods
* Company organizations, ECS implications on society

Copyright by Martin Törngren/2001-11-15

Summary

- A new way of implementing control systems
  (to embed or not to embed)
- Characteristics: Machine embedding, real-time, safety criticality,
  distributed systems and multidisciplinarity
- Enormous potential (SW enabled control)
- Exiciting ubiquitous computing future with new applications
- Challenges:
  Manage and limit the complexity!
  Dependability ("pålitlighet")!
  Turn ECS into a mature engineering discipline!

Copyright by Martin Törngren/2001-11-15

Embedded Control Systems: More information

Sweden:

> SNART - *www.docs.uu.se/snart*
> ARTES - *www.artes.uu.se*
> Encress - *www.sp.se/encress*
> Incose - *www.incose.org*
> Mekatronikmöte - *www.md.kth.se/Mechatronics2001*
> SOCware - *www.socware.com*

Internationally:

> *www.sae.org*, *www.ieee.org*, *IFAC* (*http://158.42.53.29:8080/index.htm*)
> DARPA: Software enabled control (*http://www.darpa.mil/ito/research/sec/index.html*)
> *IBM - Autonomic computing - http://www.research.ibm.com/autonomic/*
> 6th EC framework program (~2003-06) includes the Information Society Technologies program - *www.cordis.lu*

Copyright by Martin Törngren/2001-11-15